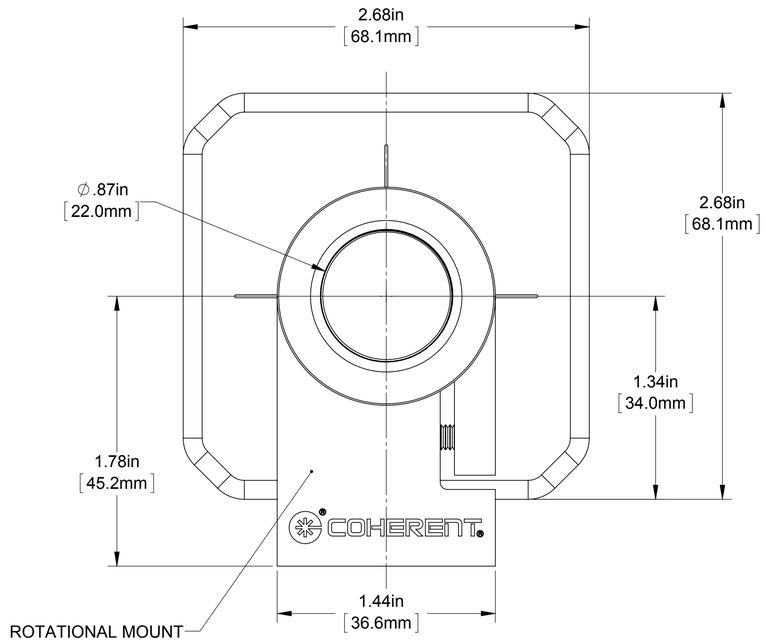

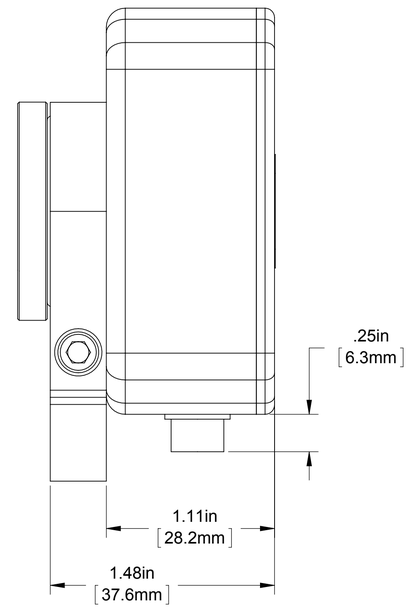

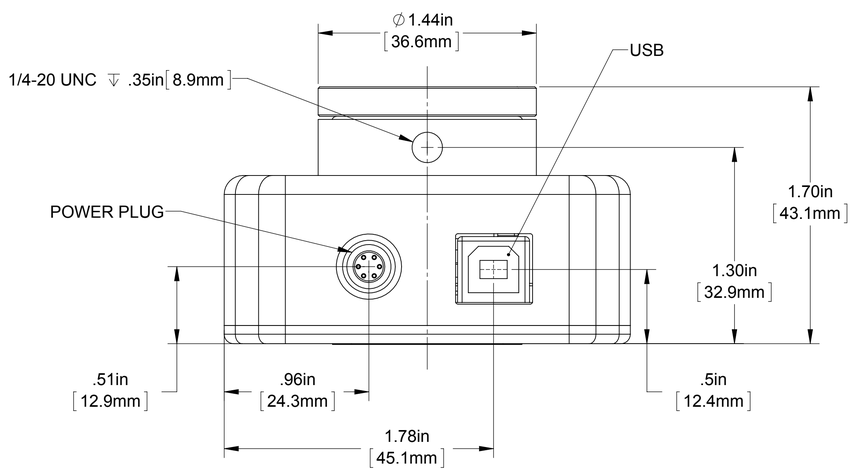

Title:
LaserCam HR II - 2/3" USB Camera System

COHERENT
5100 Patrick Henry Drive
Santa Clara, CA 95054
www.coherent.com

THIRD ANGLE PROJECTION

PROPRIETARY NOTICE:
THE INFORMATION CONTAINED IN THIS DRAWING IS THE SOLE PROPERTY OF COHERENT, INC. IT IS NOT TO BE USED, REPRODUCED, OR DISCLOSED IN WHOLE OR IN PART TO ANYONE WITHOUT THE WRITTEN PERMISSION OF COHERENT, INC.

DRAWING NOT TO SCALE | Date: 3-18-15 | Rev AB